HEALTHPACK

BLUESKY

300ml PET Pharma Veral, 28mm ROPP Neck

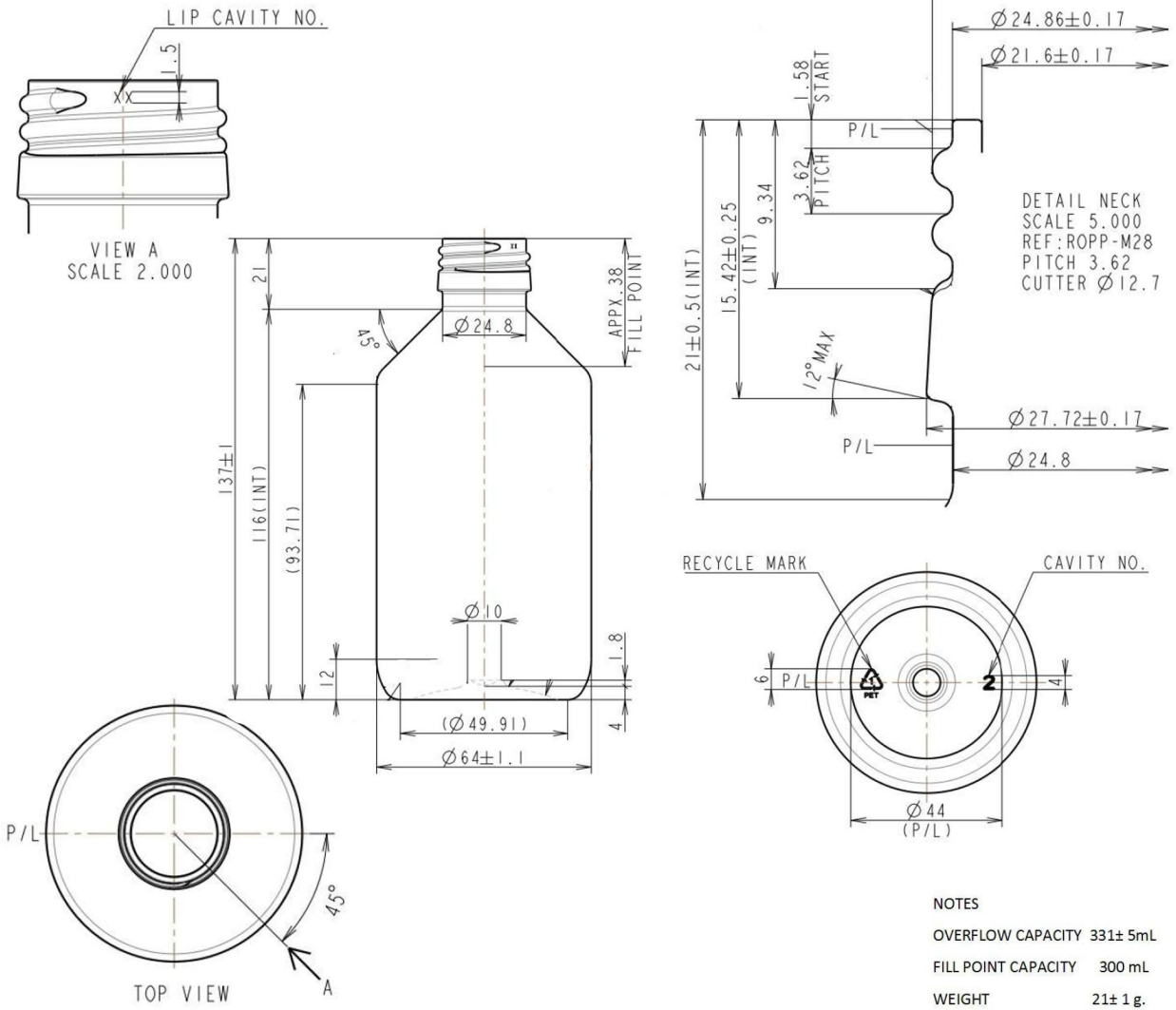

No Image

Bluesky Product Code	**PH300XT-SP**
Colour	**White**
Size / Design	**300ml**
Content (Brimful)	**331ml ± 5ml**
Neck Size	**28 ROPP**
Height	**137mm ± 1mm**
Weight	**21g ± 1g**
Width	**64mm**
Last Updated By	**GJW - 09/06/2021**

Bluesky, Horizon House, Estate Road Five, Grimsby, DN31 2TG
Telephone +44 (0)1472 240 940 **Email** sales@blueskysolutionsuk.com **Visit** www.blueskysolutionsuk.com