HEALTHPACK

BLUESKY

150ml PET Skypack Jar, 38/400 CT Neck

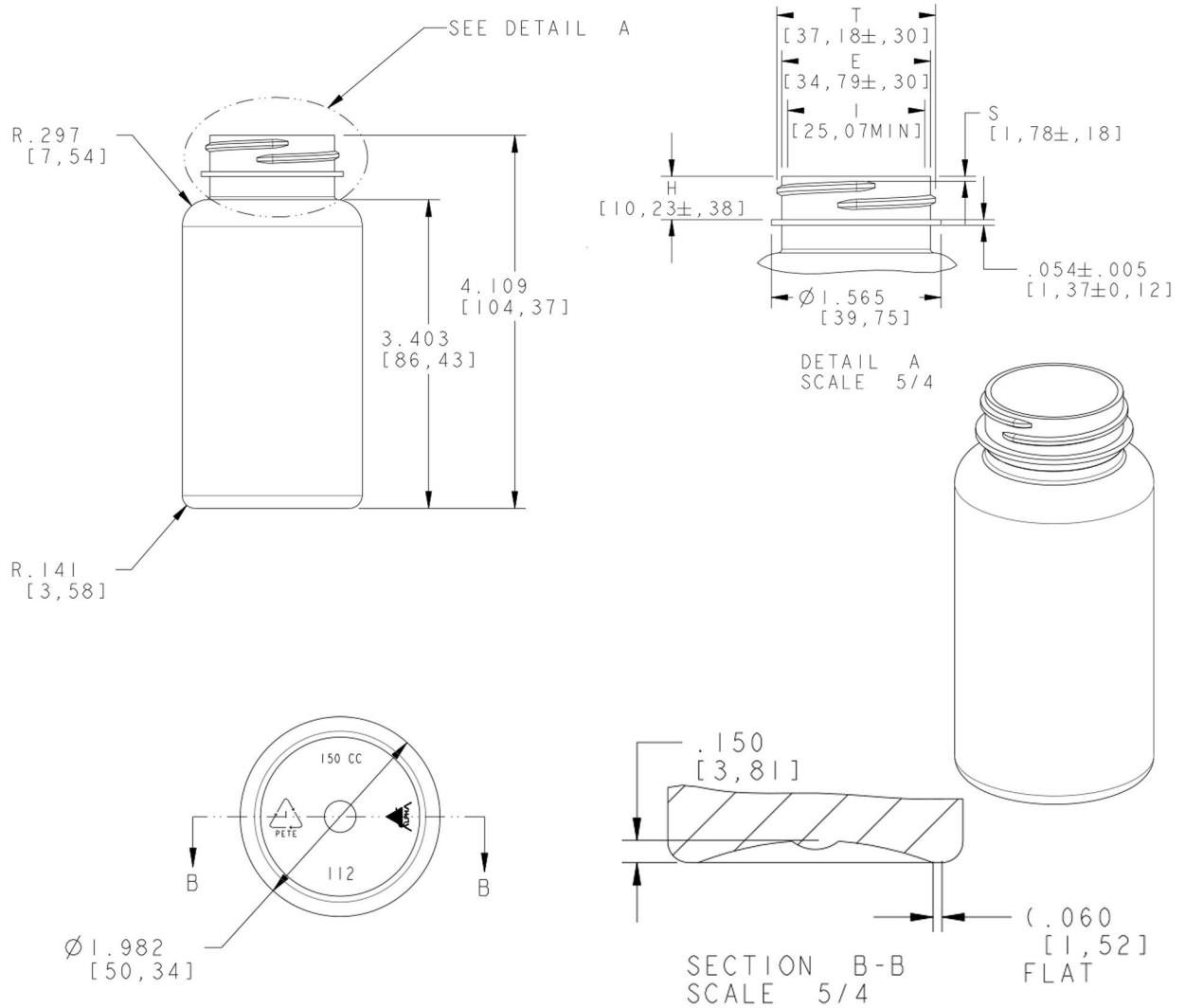

No Image

Bluesky Product Code	**SKY150XT**
Colour	**N/A**
Size / Design	**150ml**
Content (Brimful)	**170ml ± 6ml**
Neck Size	**38/400**
Height	**104.37mm**
Weight	**21g ± 1g**
Width	**50.34mm**
Last Updated By	**GJW - 28/05/2021**

Bluesky, Horizon House, Estate Road Five, Grimsby, DN31 2TG
Telephone +44 (0)1472 240 940 **Email** sales@blueskysolutionsuk.com **Visit** www.blueskysolutionsuk.com