Resilux
The power of PET

PRODUCT REFERENCE

P122E0

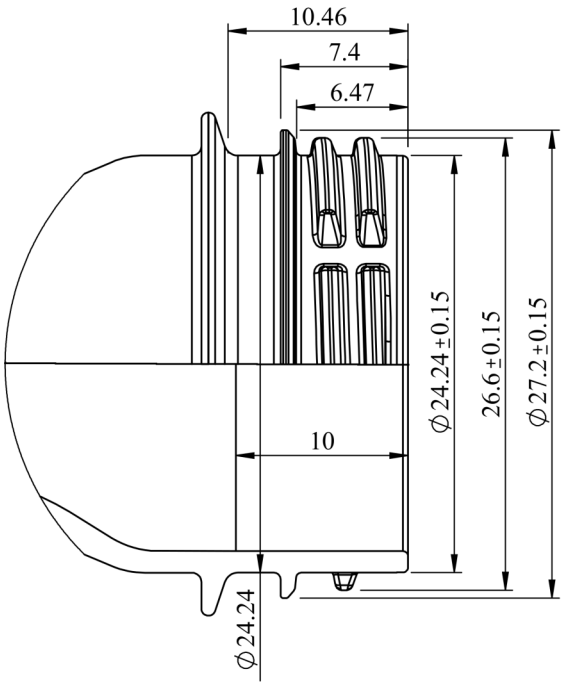

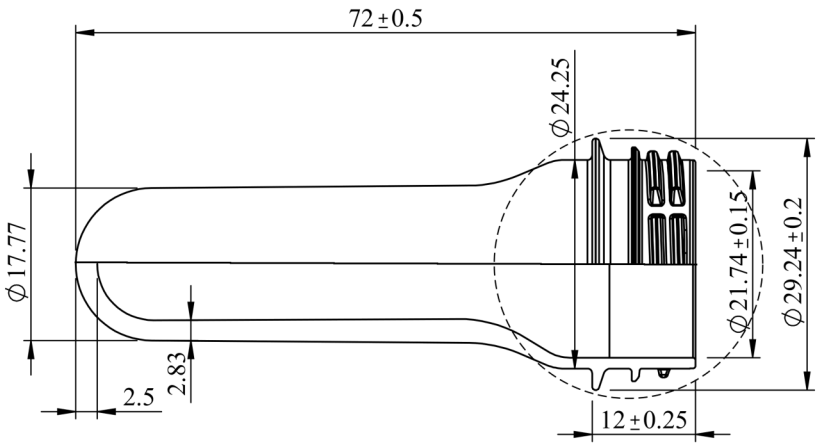

Product Range	**Carbonated Drinks**
Weight	**12.2 ± 0.5 g**
Neck-Finish	**26/22 (GME 30.38)**

sales@resilux.com

WE PEOPLE PLANET PRODUCT

This design is property of Resilux. Neither the drawing nor the information contained herein may be copied, reproduced or otherwise used without written permission of Resilux. The content of this document is provided purely for information purposes and does not, under any circumstances, constitute a business proposal. Resilux makes no, and expressly disclaims any, representations or warranties, express or implied, regarding this design including, without limitation, any implied warranties of merchantability or fitness for a particular purpose. **www.resilux.com**