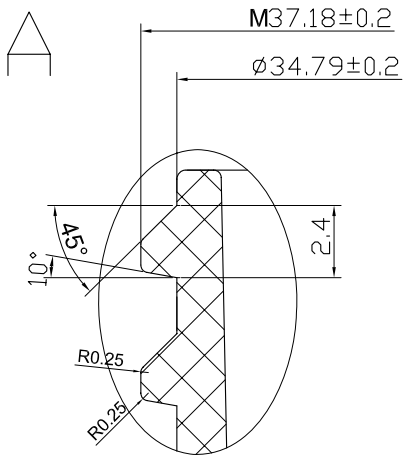

DATA:
single thread p=4.24
right- hand thread

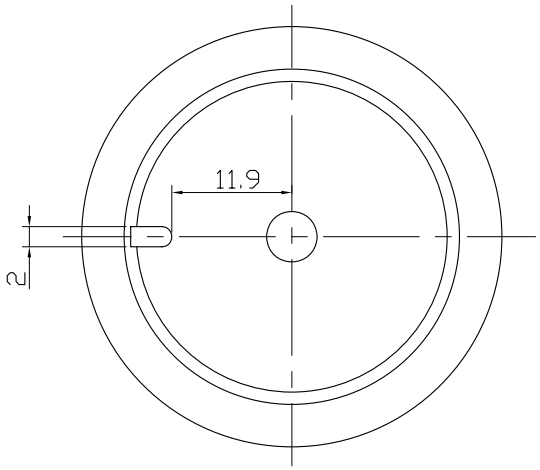

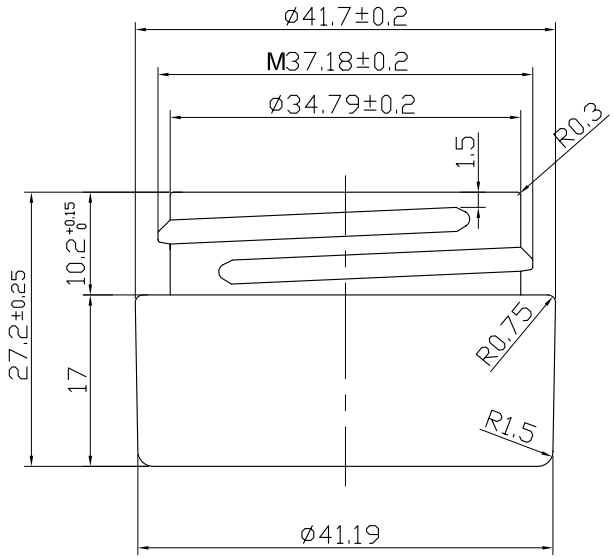

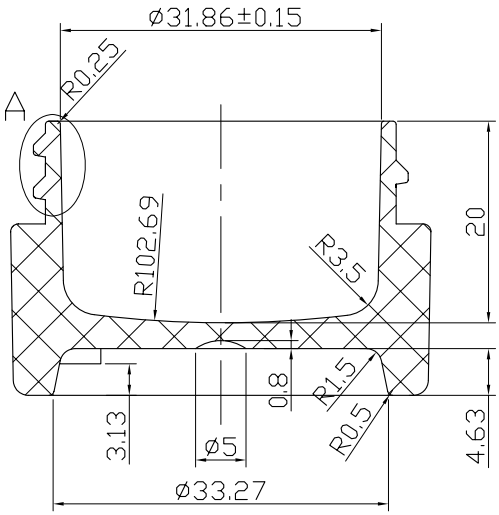

Mark	Modifications	Modifier	Date

Element packaging

PRODUCT: 10g PETG JAR- jar

DRW. NO: PJ2020025-10ml

0≥10--±0.15
10≥40--±0.20
40≥90--±0.3
90≥200--±0.5
Angular--±0.5°

MAT'L: PETG	PART WEIGHT:	DESIGNER: Eric
SCALE:	DATE: 2008/09/16	CHECKED BY:
PROG:	PAGE:	APPROVED BY: